Creep Testing of One-Component Polyurethane and Emulsion Polymer Isocyanate Adhesives for Structural Timber Bonding*

Simon Aicher
Zachary Christian
Gordian Stapf

Abstract

Moisture hardening one-component polyurethane (PU) adhesives and emulsion polymer isocyanate (EPI) adhesives have recently gained a considerable market share in structural timber gluing, especially in Europe. The creep behavior of bond lines between solid timber adherends with said adhesives, specifically nine PU and five EPI products, along with two phenolic resorcinol-formaldehyde (PRF) adhesives used for reference purposes, were studied. Most of the adhesives investigated are approved for gluing of structural timber components in Europe.

All of the reported 34 bending creep test series (with 340 specimens), were performed with two-part laminated spruce (*Picea abies*) specimens according to the European structural adhesive creep test standard EN 15416-3. The standard addresses the ratio R_C of creep between PU and EPI adhesives' bonds versus the minimally creeping bond lines of matched specimens glued with a reference PRF adhesive. Mainly glue line thicknesses of 0.3 mm were investigated, with some additional tests having been performed with 0.2- and 0.5-mm-thick glue lines as well.

The investigations provide a substantial insight into the creep behavior of the two regarded polyaddition adhesive families. Additionally, the evaluation proves, for PUs and EPIs for test glue line thicknesses of 0.3 mm and less, that it is well justified to reduce the presently prescribed creep periods of 26 and 52 weeks down to 13 and 26 weeks, respectively. The results will serve as a basis for a change of the European test and requirement standards on structural PU and EPI adhesives.

Moisture curing one-component polyurethane (PU) adhesives and emulsion polymer isocyanate (EPI) adhesives and their respective bond lines joining wooden adherends reveal in general a considerably more pronounced creep behavior compared with polycondensation adhesives, such as phenolic resorcinol resins, especially at higher load levels and temperatures (George et al. 2003, Na et al. 2005). This affects the creep-rupture behavior as well, because strain limits are failure relevant for polymers (Geiss 2011). The increased creep tendency of PU adhesives has led to highly critical statements that the use of these adhesives could manifest an outright danger when used for structural applications (George et al. 2003). Still, the use of these adhesive types for structural timber bonding has gained an increasingly greater share of the market of glued timber products during the past decade in Europe, whereby no severe damages were encountered for approved adhesive products. A major reason for the obvious discrepancy between some assessments

---

The authors are, respectively, Department Head, Research Associate, and Research Associate, Timber Constructions, Materials Testing Inst. (MPA Stuttgart, Otto-Graf-Institut [FMPA]), Univ. of Stuttgart, Stuttgart, Germany (simon.aicher@mpa.uni-stuttgart.de [corresponding author], zachary.christian@mpa.uni-stuttgart.de, gordian.stapf@mpa.uni-stuttgart.de). This paper was received for publication in April 2014. Article no. 14-00040.

* This article is part of a series of 10 selected articles addressing a theme of efficient use of wood resources in wood adhesive bonding research. The research reported in these articles was presented at the International Conference on Wood Adhesives, held on October 9–11, 2013, in Toronto, Canada. All 10 articles are published in this issue of the *Forest Products Journal* (Vol. 65, No. 1/2).

Forest Prod. J. 65(1/2):60–71.
doi:10.13073/FPJ-D-14-00040

presented in the literature and field experience could be a result of the nonlinear plasticizing and strain softening constitutive law of PUs that leads to distribution of high localized stresses (Serrano 2000, Aicher 2003).

The first national permits for using PUs for structural timber bonding were granted by the Materials Testing Institute at the University of Stuttgart (MPA 1991, 1993), as authorized by the German building authority (DIBt). The first national technical approval for a PU (DIBt 2002) was granted within the context of contact-free adhesive ribbon application for finger joints. As for EPIs, the first EPI was approved nationally in 2001 (DIBt 2001). Since the first approvals, especially in the case of PU adhesives, a large number of products developed by several different adhesive manufacturers have appeared on the market. As of today, about two dozen PU products have been approved in Europe, primarily by DIBt, either for exclusive production of finger joints in structural timber or laminations or for face gluing of glulam and crosslam. PUs and EPIs are highly regarded due to several features inherent to these types of adhesives, including high bond strength at ambient climate conditions and pronounced glue line integrity in delamination and rolling shear testing. Additionally, very short clamping times and, especially in the case of PUs, easy, contact-free application in finger joint gluing are also of significance. Furthermore, PUs' innoxiousness due to lack of formaldehyde emissions is one of the largest driving forces behind the growing presence of polyaddition adhesives.

Within the context of testing and certification of adhesives for structural timber bonding according to European Committee for Standardization (CEN) rules, three test methods and their respective requirements address the creep and creep rupture behavior of the adhesives. Creep rupture, not discussed here, is investigated with regard to shear strength by a long-term multiple block shear test at varying climate conditions according to EN 15416-2 (CEN 2008a), similar to ASTM D3535 (ASTM International 2013). The verification of creep rupture in tension perpendicular to the glue line at varying climates, also known as the Stuttgart glass house test, is at present described in Annex B.2 of the European glulam standard (CEN 2013a). The creep behavior treated in this article is assessed on the basis of EN 15416-3 (CEN 2010) by means of a four-point bending test at cyclic climate conditions, conducted with a specified medium-size specimen with one bond line. The creep assessment is based not on absolute values but rather on the ratio of relative creep between the specimens of the particular polyaddition adhesive and the matched specimens bonded with phenolic resorcinol-formaldehyde (PRF) resin. According to the present standard provisions, the test lasts at least 6 months (26 wk) and may be extended to a year if the permissible creep limit is exceeded. It is obvious that the stated long test times pose a considerable obstacle to the development of new adhesives.

This article compares test results of 34 creep bending test series with different PU and EPI adhesive products with respect to different creep durations and influence of glue line thickness. The results are evaluated with regard to an eventual reduction of the current CEN-specified creep test duration in order to enable a faster prototyping of PU adhesives. Further, the investigations provide substantial insight into the creep behavior of tested products from both of the regarded polyaddition adhesive families.

Creep Test Procedure and Specimen Manufacture

As mentioned in the introduction, the assessment of whether the creep rate of PU and EPI adhesives according to EN 15416-3 (CEN 2010) is sufficiently low is based not on absolute creep values but rather on a comparison of the creep of the specifically regarded polyaddition adhesive versus the minor creep performance of an established phenol-resorcinol adhesive (no specific product name prescribed). The creep bending tests with constant dead loads and cyclically stepped climate are conducted with closely matched timber specimens in order to eliminate the influence of the expressed mechanosorptive creep behavior of the wooden adherends. The experimental procedure for evaluation of the creep behavior is based on a four-point bending test of a medium-size specimen with one glue line at middepth of the cross section, i.e., at the location of highest shear stress. The specimen buildup consists of two flatwise bonded scantlings, with dimensions and test setup as shown in Figure 1.

The manufacture of one pair of the matched PU or EPI specimen and its PRF reference specimen is shown schematically in Figure 2. The board material used is straight grained, defect-free spruce wood (*Picea abies*) with a density of 425 ± 25 kg/m^3 at 12 percent moisture content and shall have a symmetrical annual ring configuration versus midwidth. The cross-sectional dimensions (thickness and width) are 33 by

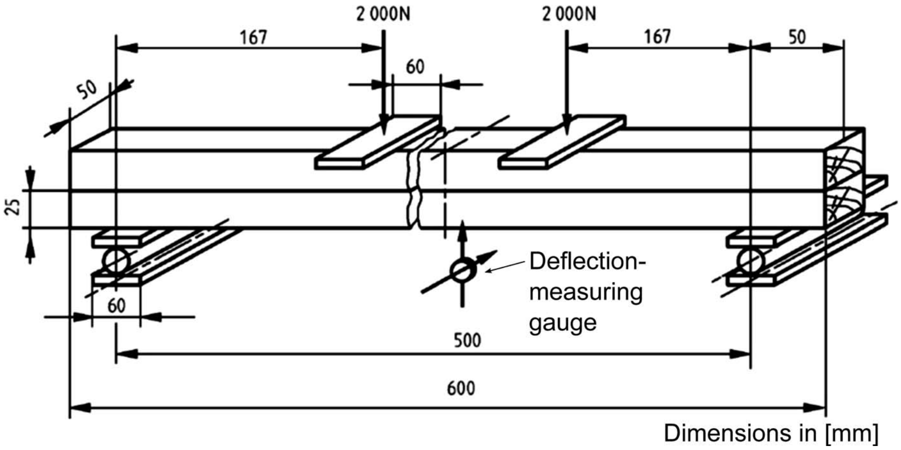

Figure 1.—Test setup and specimen dimensions of creep tests according to EN 15416-3 (European Committee for Standardization 2010).

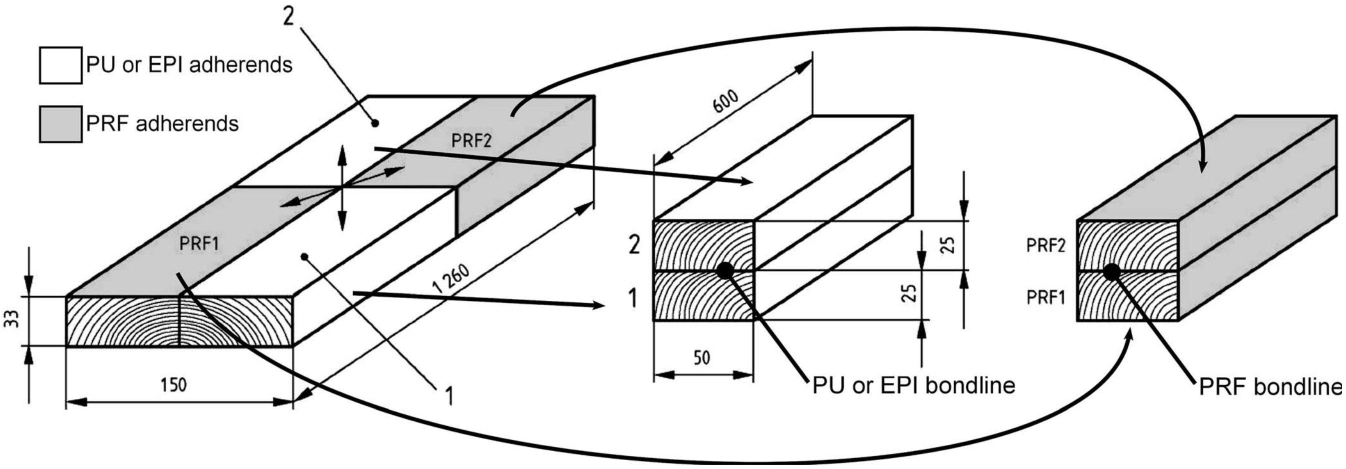

Figure 2.—Buildup and assembly details of one pair of matched bending creep specimens (PU or EPI and PRF bonded) according to EN 15416-3 (European Committee for Standardization 2010). PU = polyurethane; EPI = emulsion polymer isocyanate; PRF = phenolic resorcinol-formaldehyde.

150 mm, and the length of the board is about 1,260 mm. The board is cut along midwidth and at midlength, resulting in four scantlings, each with an annual ring orientation of about 30° to 60°, which are then glued crosswise to deliver one pair of matched specimens as indicated in Figure 2. Before gluing, the scantlings are milled to a nominal thickness and width of 25 and 70 mm, respectively. Then one of the two specimens with final cross section of 50 by 50 mm and a length of 600 mm is glued with the PU or EPI adhesive to be investigated and the other is glued with PRF adhesives, which is used for reference purposes.

The attainment of the target glue line thicknesses can be realized by different methods, such as milling of a groove or using distance holders. For realization of a glue line thickness of 0.3 ± 0.1 mm as prescribed at the time uniquely for PU adhesives (CEN 2010), milling of a groove with a depth of 0.2 ± 0.1 mm in a scantling with an oversized thickness of 25.2 ± 0.1 mm has proven adequate as noted in the standard. With respect to the target or test glue line thickness, it should be stated that the classification and performance standard on EPI adhesives, EN 16254 (CEN 2013b), provides for three different subclasses of glue line thickness in use, and thus is also related (see below) to glue line thickness in testing. This corresponds to an even higher sensitivity of bond line properties on the glue line thickness than for PU adhesives. Depending on the maximum glue line thickness in use, EPI adhesives are assigned to one of the following application classes: (1) general purpose adhesives, (2) small dimension adhesives, and (3) finger jointing adhesives associated with maximum glue line thicknesses in use of 0.3, 0.2, and 0.1 mm, respectively. The thickness of the glue line in creep testing then has to be chosen (CEN 2010) as equal to the maximum glue line thickness in use. This is presently not addressed in the test standard explicitly but will be addressed in an upcoming version.

The gluing, cramping, and postcuring for a minimum of 7 days is conducted at constant climate conditions of 20°C and 65 percent relative humidity (RH). According to EN 15416-3:2010 (CEN 2010), in total, five pairs of matched specimens constitute one test sample to be used in the creep test.

The creep testing of the specimens has to be performed in a test chamber or room with a controlled climate. All five PU or EPI specimens, as well as the respective PRF reference specimens, are loaded at their third points with dead load forces of 2,000 N resulting in a shear stress of

$$\tau_{\max} = \left(\frac{3}{2}\right) \cdot 2{,}000\ \text{N}/(50\ \text{mm} \cdot 50\ \text{mm}) = 1.2\ \text{MPa} \qquad (1)$$

at the glue line along the constant shear force areas between the supports and the respective adjacent loading points. The applied loads lead to a maximum outer fiber bending stress of 16 MPa, which is well below the characteristic bending strength, $f_{\mathrm{m,k}} \approx 40$ to 70 MPa, of the (almost) defect-free clear wood material. For measurement of the global creep of the specimen and the resulting deduced adhesive creep behavior, the midspan deflection is recorded at midwidth at the bending tension edge by dial gauges with a measuring accuracy of 0.01 mm. Figure 3 shows the test setup carried out at the MPA with two specimens mounted in one test frame.

The specimens are subjected to a cyclic, stepped climate whereby one cycle consists of two steps, termed Climates 1 and 2, each lasting 1 week. Temperature and RH in Climate 1 (moderate temperature, very moist) are 20°C ± 2°C and 85 ± 5 percent RH, whereas in Climate 2 (very warm and dry), the conditions are 45°C ± 2°C and 40 ± 5 percent RH. Installment of the specimens and ramp loading to the constant creep load level takes place at 20°C and 65 percent RH. The climate cycling is begun with moist Climate 1. (Note: The standard does not specify the time span between ramp loading and start of climate cycling. All test results given subsequently are based on the procedure followed at the MPA where climate cycling starts 24 h after ramp loading, performed at a climate of 20°C and 65 percent RH, which is then kept constant for 1 d.) The compulsory first loading period consists of 13 climate cycles (26 wk). In case the prescribed relative creep requirement (see below) is not met, a second loading sequence of 13 climate cycles is subsequently added.

Test Evaluation and Requirements

The test standard states that for each specimen, the relative creep (factor) shall be determined at least at the end of each climate step, i.e., once a week:

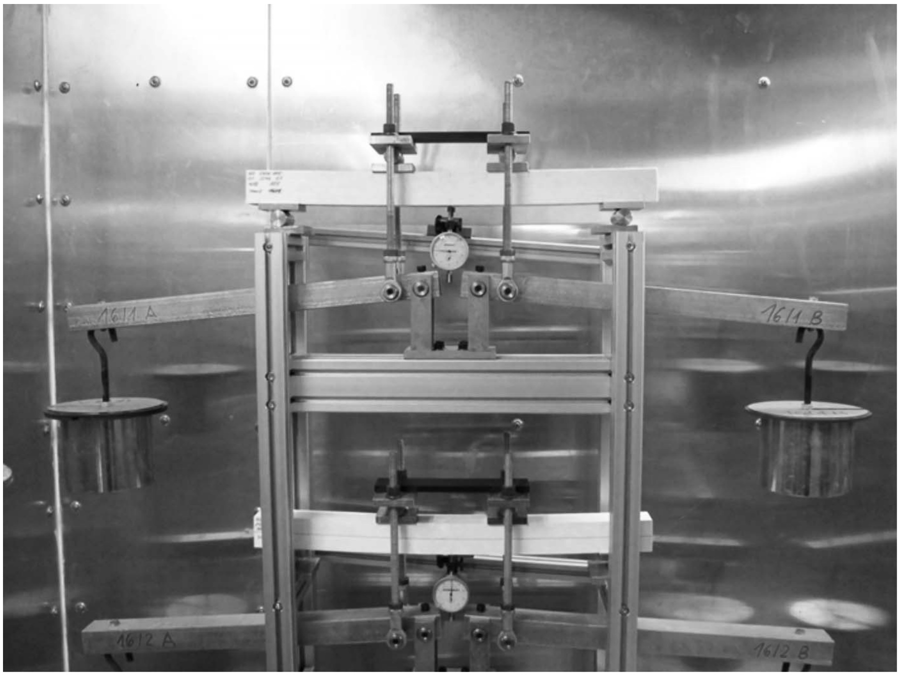

Figure 3.—Realized test setup for bending creep experiments according to EN 15416-3 (European Committee for Standardization 2010).

$$k_{\mathrm{def}}(t) = \frac{w(t)}{w(0)} - 1 \qquad (2)$$

where

$w(0)$ = initial elastic midspan deflection after dead load application, and

$w(t)$ = midspan deflection at loading times t.

With regard to the measurement of the initial deflection $w(0)$, the standard prescribes for the first recording to be taken 1 minute after loading the respective specimen, i.e., $w(0) = w(60\ \mathrm{s})$, and thus the instantaneous creep within the first 60 seconds of loading is ignored. This fact, though rather meaningless for the global creep assessment of the adhesives, should be kept in mind when considering a scientific related evaluation of the test results.

Based on the primary empiric deflection and creep data, the ratio of relative creep (R_C) of the investigated adhesive (PU or EPI) and the PRF adhesive is derived for each pair (i) of matched specimens as

$$R_{\mathrm{Ci}}(t) = k_{\mathrm{def,PU/EPI},i}(t) / k_{\mathrm{def,PRF},i}(t) \qquad i = 1 \ldots 5 \qquad (3)$$

The requirement on the creep behavior is based on the averaged ratio of relative creep of the five pairs of matched specimens

$$R_{\mathrm{Cmean}}(t) = \frac{1}{5} \sum_{i=1}^{5} R_{\mathrm{C}i}(t) \qquad (4)$$

to be determined for $t = 26$ weeks (first compulsory creep period) and eventually for $t = 52$ weeks after the second optional creep span of 26 weeks in case the requirement for the first period was not met. In order to account for the pronounced deflection variations induced by the weekly climate changes, the relative creep after $t = 26$ or 52 weeks, $R_{\mathrm{Cmean,final}}(t)$, of each specimen pair is not simply the average of the singular values for $k_{\mathrm{def},i}(t)$, but rather the average of the four $k_{\mathrm{def,mean}}$ values measured at the respective ends of the last four subsequent climate steps, i.e.,

$$k_{\mathrm{def,mean,final}}(t_{\mathrm{final}}) = \frac{1}{4} \cdot \sum_{j=0}^{3} k_{\mathrm{def},i}(t_{\mathrm{final}} - j\mathrm{wk}) \qquad (5)$$

where $t_{\mathrm{final}} = 26$ and 52 weeks according to EN 15425 (CEN 2008b) or where $t_{\mathrm{final}} = 13$ weeks as proposed in this article.

The permissible ratios of relative creep stated in the classification and performance requirement standards EN 15425 (CEN 2008b) and EN 16254 (CEN 2013b) for PU and EPI adhesives are given equally as

$$R_{\mathrm{Cmean,final}}(26\ \mathrm{wk}) \leq 1.12$$

and

$$R_{\mathrm{Cmean,final}}(52\ \mathrm{wk}) \leq 1.15 \qquad (6\mathrm{a}, 6\mathrm{b})$$

It is noteworthy to mention that for the case of EPI adhesives, the stated requirements are given without any differentiation for the possible creep test glue line thicknesses of 0.1, 0.2, and 0.3 mm. This is strange from a mechanical point of view, which is substantiated by the subsequently given results.

Background on Investigated Glue Line Thicknesses

The creep deformation test in bending at cyclic climate as described in EN 15416-3 (CEN 2010) was originally introduced in the first version of the European standard on glulam, EN 14080:2005, Annex C5 (CEN 2005). The reason for implementing tests and requirements on adhesives in a building product standard emanated from the fact that during the time period when the European glulam standard was developed, no standardized specific tests and respective requirements on either PU or EPI adhesives existed. The lack of such standards, especially for assessment of PU adhesives, would have prevented the use of this adhesive class for structural glulam, although it had already been successfully used since the early 1990s in some European countries based on national building regulations (MPA 1991, 1993; Radovic and Goth 1994). The then specified creep test method (CEN 2005) constituted one of several tests considered to be essential in addition to the established tests on polycondensation adhesives to prove sufficient strength and long-term integrity of glue lines. The Annex specified the test method as well as the requirements for PU adhesives with a glue line thickness of up to a maximum of 0.5 mm (then heavily debated) in the final product. Consequently, the glue line thickness of the creep specimens described in CEN 2005 was 0.5 mm.

As a follow-up to EN 14080 (CEN 2005), still valid in Europe as of July 2014, the performance requirement standard for one-component polyurethane adhesives, EN 15425 (CEN 2008b), together with the bending creep test standard EN 15416-3 (CEN 2007), have been issued. According to the PU adhesive requirement standard, the glue line thickness in the finished product (e.g., glulam) was now restricted to be maximally 0.3 mm. In the addressed bending creep test standard, however, the glue line thickness of the specimens was specified as a closed-gap glue line, usually understood as being less than 0.1 mm. Nevertheless, it was stated in the standard that the bonding shall be performed with the longest assembly time of the adhesive as specified by the manufacturer. This procedure, due to the late application of pressure, leads to effective glue line thicknesses beyond 0.1 mm, with finished specimens typically having a glue line thickness in the range of 0.15 to about 0.25 mm.

In the context of an amendment of the first version of the test standard (CEN 2007), the glue line thickness of PU-bonded specimens in the follow-up version (CEN 2010) was then changed to 0.3 ± 0.1 mm. The production of these glue lines, for instance, with regard to assembly time, is prescribed to be performed in accordance with the recommendations of the adhesive's manufacturer.

Regarding EPI adhesives, which are even more sensitive to glue line thickness than PU adhesives, the recently finalized requirement standard (CEN 2013b) specifies bond line thicknesses during testing of 0.1 to 0.3 mm, depending on the intended use of the adhesive; this is further addressed below.

Database

The presented database comprises test results on the creep behavior of nine different PU adhesives, five EPI adhesives, and two phenolic resorcinol adhesives used for reference purposes and not differentiated within the following. A majority of the adhesives, produced by six adhesive manufacturers, are commercially available and approved or qualified according to European adhesive classification standards and/or nationally legislatorial provisions for bonding of structural timber elements, such as finger jointed solid lumber, glulam, and crosslam.

The following reports on a total of 34 test series comprising a total of 340 specimens, including 23 series with PU-bonded specimens and their respective matched PRF-bonded specimens and 11 test series with EPI-bonded specimens. Most of the reported test series (i.e., 30 of 34) were performed with glue line thicknesses of 0.3 mm as prescribed in EN 15416-3 (CEN 2010) for PUs in general and as specified for general-purpose EPIs (CEN 2013b). In addition to the tests with 0.3-mm-thick glue lines, results for four PU test series with glue line thicknesses of 0.2 and 0.5 mm are also presented.

Since 2000, structural adhesives have been considered in Germany as regulated building products, as distinguished from all other European countries. This necessitates either conformity to a European standard plus eventual national additions or a qualification via a German technical approval. Consequently, the majority of the test series presented as follows was performed within the context of adhesive approval tests for German technical approvals. A few test series have been performed within a research project dealing with creep and creep rupture performance of polyaddition adhesives (see below). Table 1 reveals the creep test configurations.

Test results

Figures 4a and 4b show exemplarily typical midspan deflection curves $w(t)$ monitored within a creep loading time of 52 weeks. Figure 4a depicts the deflection behavior of a matched PU and PRF specimen pair, and Figure 4b presents the results for an EPI–PRF pair. Included zoomed-in plots depict the deflection evolution within the first creep day at climate 20°C and 65 percent RH, followed by Climate (step) 1, consisting of 1 week of the rather moist environment 85 percent RH at 20°C and then succeeded during 1 week by the very warm and dry Climate 2 (45°C, 40% RH). The creep deflection curves reveal a typical zigzag pattern induced by the stepped climate changes combined with exclusive deflection recordings only at the end of each climate step. As anticipated, the mechanosorptive effect (Ranta-Maunus 1990, Toratti 1992) leads to an acceleration of creep speed in the dry climates and to a retraction in the succeeding moist climate periods.

The differences in the time- and climate-dependent creep behaviors of the specimens bonded with polyaddition adhesives (PU and EPI) versus the reference specimens with PRF glue lines become more apparent when regarding the relative creep $k_{\text{def}}(t)$ according to Equation 2. Figures 5a and 5b show exemplarily the $k_{\text{def,mean}}$ curves (average of five specimens each) for the samples of PU adhesive P6 and of EPI adhesive E5, respectively, and of their associated PRF specimens. The ratio of the relative creep $R_{\text{Cmean}}(t)$ of the PU and EPI adhesives, P6 and E5, respectively, versus the related PRF specimens or samples according to Equations 3 and 4, which subsequently establishes the basis of the creep performance assessment of the specifically regarded polyaddition adhesives, is presented in Figures 6a and 6b. The graphs are based on the mean k_{def} curves given in Figures 5a and 5b.

Table 1 specifies the mean relative creep and creep ratio values $k_{\text{def,mean,final}}$ and $R_{\text{Cmean,final}}$, respectively, for all investigated PU, EPI, and PRF reference samples for the specifically regarded creep periods of 13, 26, and where available, 52 weeks. For the case of PU adhesive product P9, the results are given for different glue line thicknesses of 0.2, 0.3, and 0.5 mm as well.

Discussion of PU Adhesive Creep Results

Effect of creep time

Figures 7 and 8 present the $k_{\text{def,mean,final}}$ and $R_{\text{Cmean,final}}$ results related to 13 and 26 weeks as specified in Table 1 for

Table 1.—Results of relative creep values $k_{def,mean,final}$ and derived creep ratio values $R_{Cmean,final}$ for polyurethane (PU), emulsion polymer isocyanate (EPI), and matched phenolic resorcinol-formaldehyde (PRF) samples for different creep times.

Adhesive type	Sample no.	Glue line thickness (mm)	13 wk			26 wk			52 wk		
			$k_{\mathrm{def,PU/EPI,mean,final}}$	$k_{\mathrm{def,PRF,mean,final}}$	$R_{\mathrm{Cmean,final}}$	$k_{\mathrm{def,PU/EPI,mean,final}}$	$k_{\mathrm{def,PRF,mean,final}}$	$R_{\mathrm{Cmean,final}}$	$k_{\mathrm{def,PU/EPI,mean,final}}$	$k_{\mathrm{def,PRF,mean,final}}$	$R_{\mathrm{Cmean,final}}$
PU	P1	0.3	2.892	1.900	1.522	3.446	2.265	1.521	—	—	—
	P2		1.839	1.810	1.016	2.137	2.093	1.021	—	—	—
	P3		1.976	1.741	1.135	2.127	2.439	1.147	—	—	—
	P4		1.844	1.871	0.985	2.183	2.217	0.985	—	—	—
	P5		2.077	1.862	1.116	2.580	2.278	1.133	2.945	2.619	1.125
	P6		1.999	1.862	1.074	2.419	2.278	1.062	—	—	—
	P7		2.105	1.832	1.149	2.428	2.159	1.125	—	—	—
	P8		1.980	1.832	1.080	2.342	2.159	1.085	—	—	—
	P9	0.3	2.430	2.162	1.124	2.840	2.524	1.125	—	—	—
		0.2	2.147	2.066	1.039	2.409	2.320	1.039	—	—	—
		0.5	2.324	1.897	1.226	2.669	2.231	1.198	—	—	—
Mean	P2–P9	0.3	2.031	1.872	1.085	2.382	2.268	1.085	—	—	—
EPI	E1	0.3	2.236	2.247	0.995	2.705	2.631	1.028	—	—	—
	E2		1.869	1.881	0.994	2.219	2.210	1.004	—	—	—
	E3		1.548	1.790	1.157	1.766	2.044	1.158	2.088	2.389	1.145
	E4		2.152	1.989	1.089	2.503	2.325	1.090	2.890	2.660	1.100
	E5		2.174	1.989	1.084	2.528	2.325	1.100	2.853	2.660	1.080
Mean	E1–E5		1.996	1.979	1.064	2.344	2.307	1.076	—	—	—
Mean	E3–E5		1.958	1.923	1.110	2.265	2.231	1.116	2.610	2.570	1.108

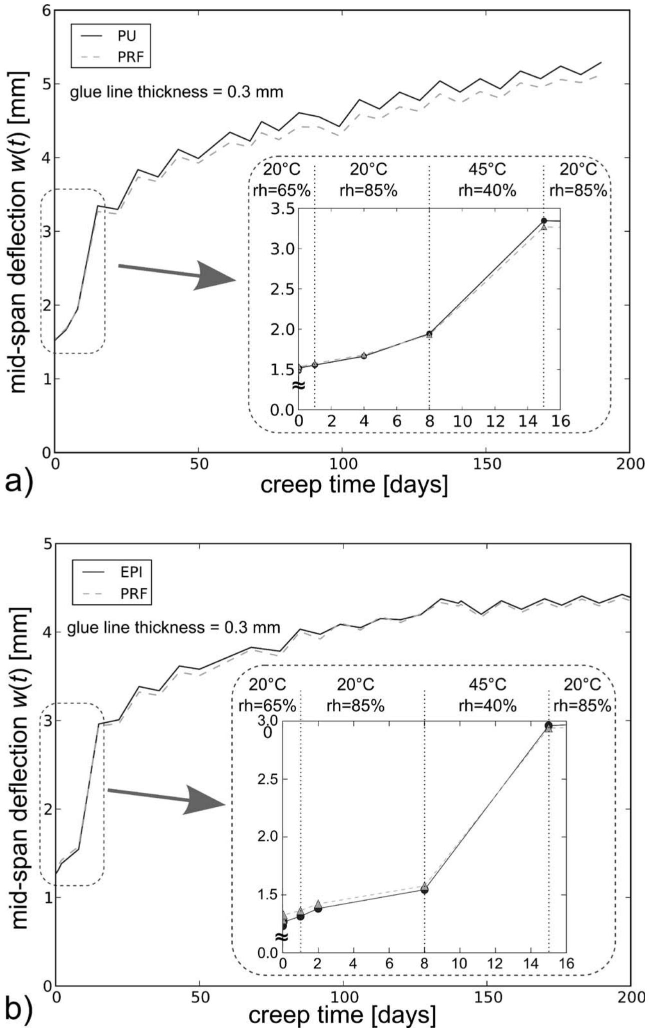

Figure 4.—Midspan deflection dependent on creep time with close-up of first two climate steps for (a) PU adhesive P6 and (b) EPI adhesive E5. PU = polyurethane; PRF = phenolic resorcinol-formaldehyde; EPI = emulsion polymer isocyanate.

nine different PU adhesives with a glue line thickness of 0.3 mm. For adhesive P9, the results for a creep loading time of 52 weeks are also given. Disregarding one obvious outlier, the unapproved adhesive P1 (see Figs. 7 and 8), which resulted in $R_{\mathrm{Cmean,final}}$ ratios of 1.52 for both 13 and 26 weeks, the $R_{\mathrm{Cmean,final}}$ values at 13 and 26 weeks ranged from minimally 0.98 to 1.15. The averages and statistical scatters of the $R_{\mathrm{Cmean,final}}$ values for a glue line thickness of 0.3 mm are almost identical for creep durations of 13 and 26 weeks,

$$R_{\mathrm{Cmean,final}}(13\ \mathrm{wk}) = R_{\mathrm{Cmean,final}}(26\ \mathrm{wk}) = 1.09 \pm 0.06,\ \mathrm{COV} = 5.5\%$$

The test results reveal that the changes of $R_{\mathrm{Cmean,final}}$ from 13 to 26 weeks, i.e., for a 13-week prolonged creep time, are marginal, which was not anticipated. Intuitively, higher relative creep ratios $k_{\mathrm{def,PU,mean}}/k_{\mathrm{def,PRF,mean}}$ were expected for the longer creep times. The fact that the relative creep ratio between the investigated PU adhesives and the matched PRF adhesives does not change on average within a considerably extended (i.e., doubled creep) loading time indicates that creep of the PU adhesive has come close to or

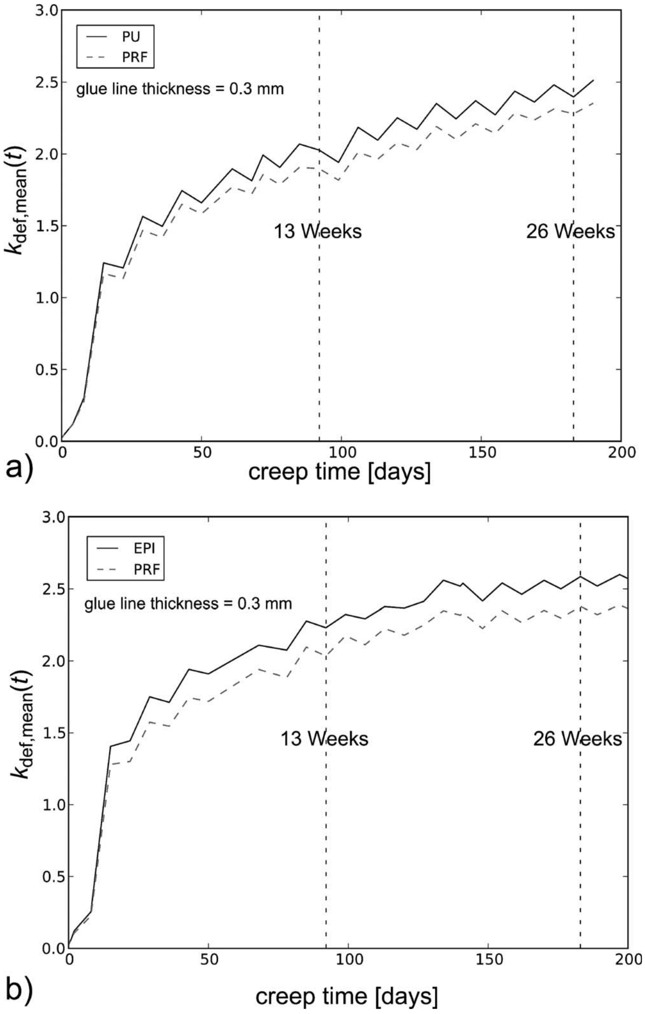

Figure 5.—Relative creep $k_{def,mean}$ dependent on creep time for (a) PU adhesive P6 and (b) EPI adhesive E5. PU = polyurethane; PRF = phenolic resorcinol-formaldehyde; EPI = emulsion polymer isocyanate.

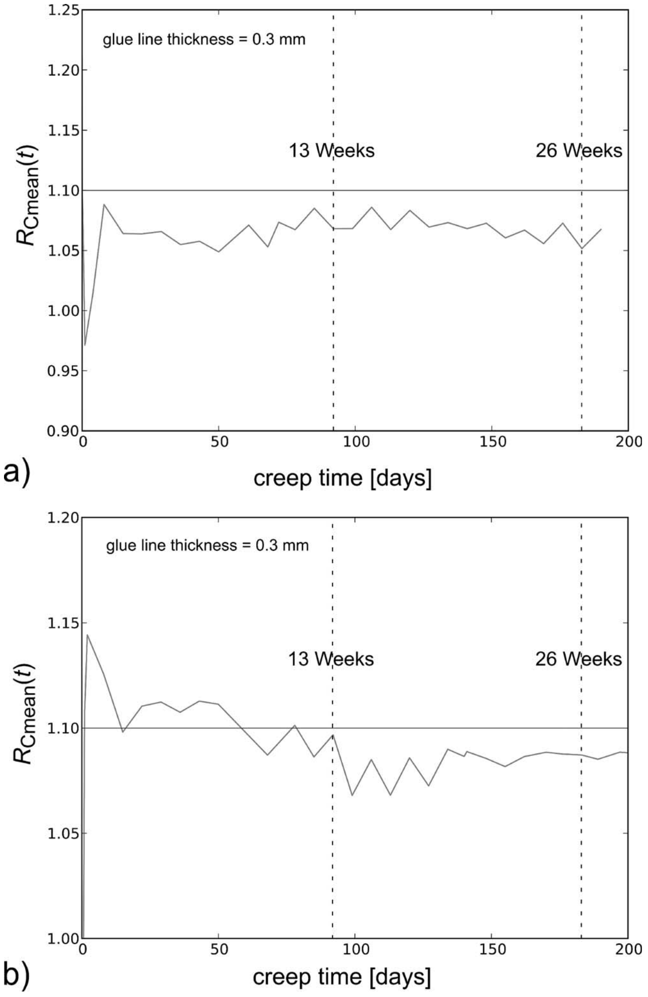

Figure 6.—Ratio of relative creep R_{Cmean} dependent on creep time for (a) polyurethane adhesive P6 and (b) emulsion polymer isocyanate adhesive E5.

reached a limit value. This is contrary to the glued wood specimens themselves, which show, regardless of the adhesive used for bonding of the two laminations, a steady increase in creep deflection (see Figs. 4a and 4b). The assumption that creep of the PU adhesives terminates beyond a creep time of roughly 13 weeks at the imposed shear stress level and climate ranges can be quantified based on the following assumptions:

1. PRF glue lines of about 0.1- to 0.3-mm thickness do not markedly creep at the imposed climate conditions, if at all. The creep is less than or equal to that of the wood substrate.
2. The matching of wood adherends as performed in the discussed creep tests results in a well-comparable or equal creep behavior of the adherends bonded with either PU or PRF.

Based on the stated assumptions, a subtraction of the creep curves $w(t)$ of the matched PU and PRF specimens delivers the unique creep deflection contribution of the PU glue line. Figures 9a and 9b exemplarily depict the so-derived deflection data points for PU adhesive products P6 and P7 and their respective matched PRF references:

$$w(t)_{\mathrm{PU\_glue\ line}} = w_{\mathrm{PU\_specimen}}(t) - w_{\mathrm{PRF\_specimen}}(t) \tag{7}$$

Both of the chosen adhesive products have fulfilled the standard requirement of $R_{\mathrm{Cmean,final}}$ (26 wk). The graphs also show the least squares fitted approximation curves of type

$$w(t) = a \cdot \left(1 - e^{-t/_{\lambda}}\right) \tag{8}$$

which correspond to the assumption of linear viscoelastic creep behavior according to a Kelvin-Voigt model. Further, the graphs show the bilinear approximations of the fitted compliance curves

$$f_{\mathrm{bilinear,1}} = \frac{a}{\lambda} \cdot t; \qquad f_{\mathrm{bilinear,2}} = \mathrm{const.} = a \tag{9a, 9b}$$

intersecting at the respective retardation time points λ, determined as $\lambda_{P6} = 44.1$ days and $\lambda_{P7} = 11.8$ days for PU adhesives P6 and P7, respectively. Both PU deflection curves reflect the typical creep response of a Kelvin-Voigt material model, revealing a fluid-type primary (creep) behavior and a solid body end state. (Note: Approximately two-thirds of the retarded end deformation value is reached at the retardation time λ.) Most of the investigated PU adhesives (excluding P1) resembled the outlined creep behavior and the stated model assumptions, revealing no noticeable viscous flow.

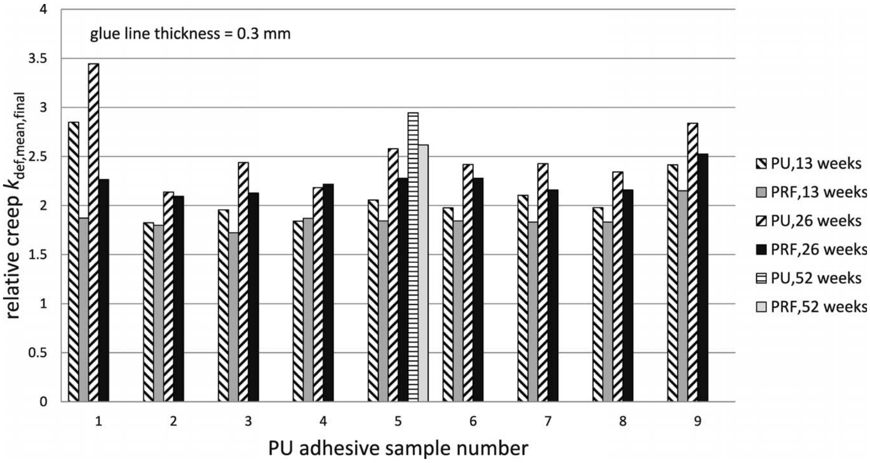

Figure 7.—Mean relative creep values $k_{def,mean,final}$ *of nine polyurethane (PU) adhesive products and of matched phenolic resorcinol-formaldehyde (PRF) samples for different creep times.*

Further detailed investigations and quantifications of the model parameters are given in a separate article.

Summarizing, it can be stated that the investigated PU adhesives reveal an apparent Kelvin-Voigt viscoelastic behavior within the investigated shear stress and climate ranges. The time for attainment of the creep limit depends on the specific adhesive and can vary considerably. In general, the creep limit is reached well within 26 weeks. The most expressed adhesive creep, up to about two-thirds of the end value, occurs within the first few (2 to about 6) weeks. This substantiated observation leads to a relative creep ratio R_{Cmean}, considered to be the decisive assessment value, which tends to arrive at a limit value in general before 13 weeks—half the current compulsory creep period. As for chemically well-formulated structural PU adhesives, almost no additional creep and change in results are encountered, and therefore it is deemed well justified to claim for a standard revision a considerably reduced compulsory first creep period of a maximum of 13 weeks. Thus, a qualification creep limit of 1.12 should be applied. In case of noncompliance, the second creep period should last until 26 weeks, when a slightly higher requirement limit of 1.13 should be chosen.

Influence of glue line thickness

The effect of glue line thickness on the creep behavior of PU-bonded specimens is exemplarily revealed by results for the adhesive P9. For this adhesive, in addition to the results for glue lines of 0.3 mm, complete test series for 26 weeks exist for glue lines of 0.2 and 0.5 mm. Apart from the different glue line thicknesses, all tests were performed according to EN 15416-3 (CEN 2007, 2010). Figure 10 shows, for the three glue line thicknesses of 0.2, 0.3, and 0.5 mm by means of bar diagrams, the averages of the relative creep values $k_{\mathrm{def,mean,final}}$ for the PU adhesive and the related matched PRF samples (compare with Table 1). Throughout all the given glue line thicknesses, the relative creep values for the tested PU adhesive are higher in comparison with the PRF bonds, where the specimens with the thickest glue line actually showed the lowest creep.

The difference of the $k_{\mathrm{def,mean}}$ values of PU versus PRF adhesives depends considerably on glue line thickness, which is best shown in Figure 11, where the relative creep ratios are given. Regardless of creep time (13 or 26 wk), $R_{\mathrm{Cmean,final}}$ increases significantly with increasing glue line thickness. This result is inherently bound to the chemical composition and especially to the isocyanate group (NCO)

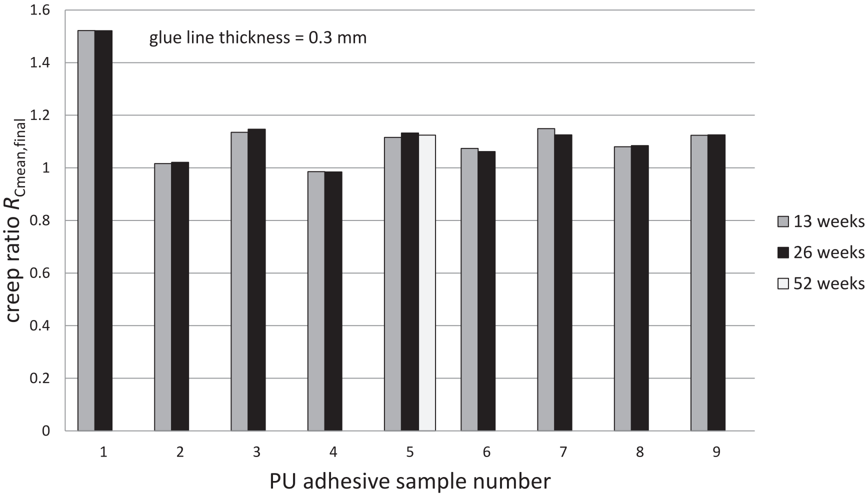

Figure 8.—Mean creep ratios $R_{Cmean,final}$ *of nine polyurethane (PU) adhesive products for different creep times.*

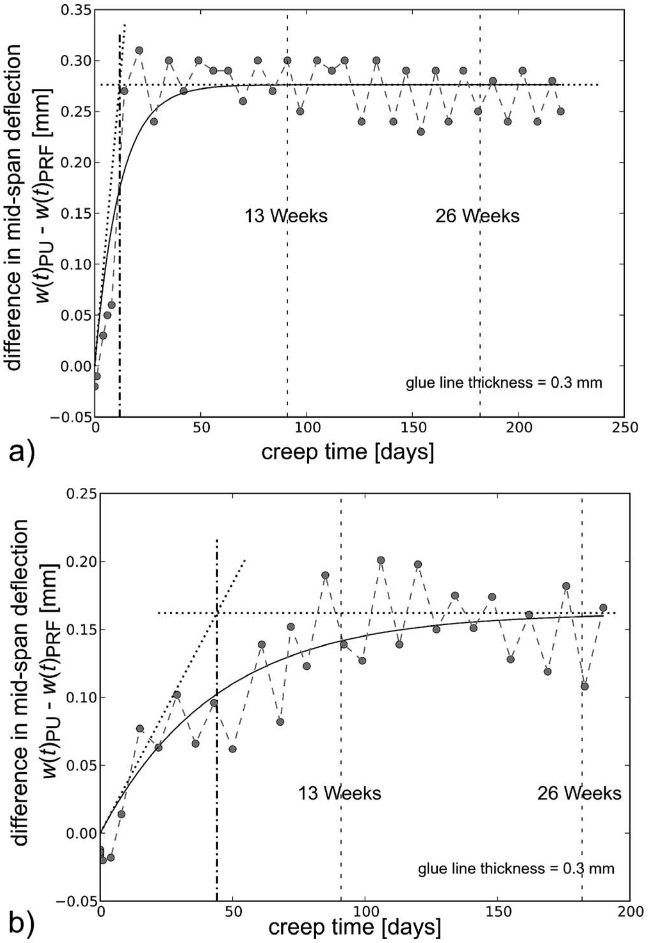

Figure 9.—Empirical differences of midspan deflections of matched polyaddition and phenolic resorcinol-formaldehyde samples and fitted creep curves: (a) polyurethane (PU) adhesive P6 and (b) PU adhesive P7.

content and further to the moisture-driven curing process of PU adhesives, leading to increased CO_2-bubble formation for the case of thicker glue lines. In this context, it should not be denied that the impact of glue line thickness on relative creep can be, depending on product, even considerably higher, as indicated by the numbers specified above. This has been verified for a few of the first-generation PUs in a recent joint research project between Bayer Material Sciences and the MPA, University of Stuttgart (to be published), where relative creep ratios at 26 weeks of up to a maximum of 1.8 were obtained. The verified, product-dependent increased creep at higher glue line thicknesses of 0.5 mm, in combination with elevated temperatures ($\geq$40°C), conforms closely to the findings and conclusions of Richter and Steiger (2005) based on dynamic thermomechanical analysis. This issue has to be kept in mind with regard to ongoing attempts to qualify one-component moisture hardening adhesives for glue line thicknesses in use, i.e., in prefabricated structural timber components up to 0.5 mm.

Discussion of EPI Creep Results

In a graphical representation of the data given in Table 1 for five EPI adhesive products tested with glue line thicknesses of 0.3 mm, Figures 12 and 13 show the respective $k_{\mathrm{def,mean,final}}$ and $R_{\mathrm{Cmean,final}}$ results. A comparison of the $k_{\mathrm{def,mean,final}}$ values with the results obtained for PU adhesives with a bond line thickness of 0.3 mm, as given in Table 1 and Figure 7, reveals for the EPIs the same order of magnitude and a well-comparable bandwidth of the scatter between different products and creep times. Consequently, this is equally true for the $R_{\mathrm{Cmean,final}}$ ratios (see Table 1 and Figs. 8 and 13), where for the creep times of 13, 26, and 52 weeks, the means (±SD) were obtained:

$$R_{\mathrm{Cmean,final}}(13\ \mathrm{wk}) = 1.06 \pm 0.07, \mathrm{COV} = 6.5\%$$

$$R_{\mathrm{Cmean,final}}(26\ \mathrm{wk}) = 1.08 \pm 0.06, \mathrm{COV} = 5.7\%$$

$$R_{\mathrm{Cmean,final}}(52\ \mathrm{wk}) = 1.11 \pm 0.03, \mathrm{COV} = 2.8\%$$

The stated average $R_{\mathrm{Cmean,final}}$ values for 13 and 26 weeks of about 1.06 to 1.08 conform very well with the average value of 1.09 given above for the PU adhesives; the same agreement applies to the respective standard

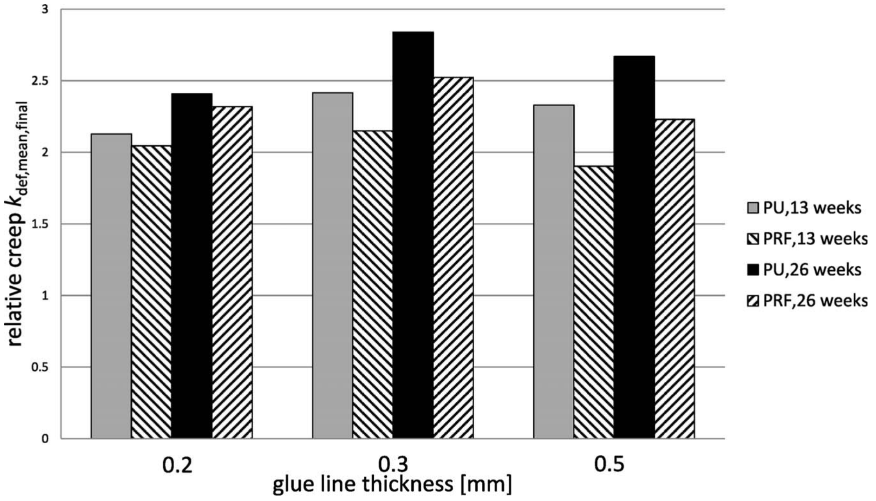

Figure 10.—Mean relative creep values $k_{def,mean,final}$ of polyurethane (PU) adhesive P9 and related phenolic resorcinol-formaldehyde (PRF) samples depending on glue line thickness and creep time.

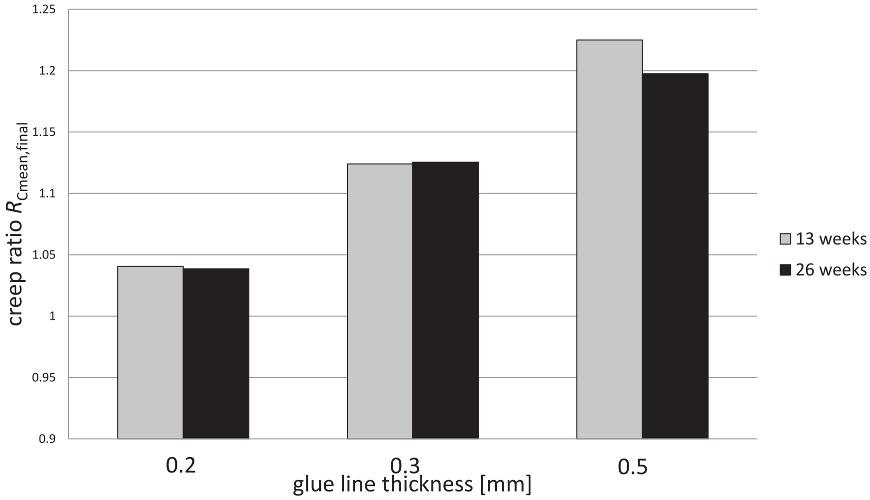

Figure 11.—Mean creep ratios $R_{Cmean,final}$ *of polyurethane adhesive P9 depending on glue line thickness and creep time.*

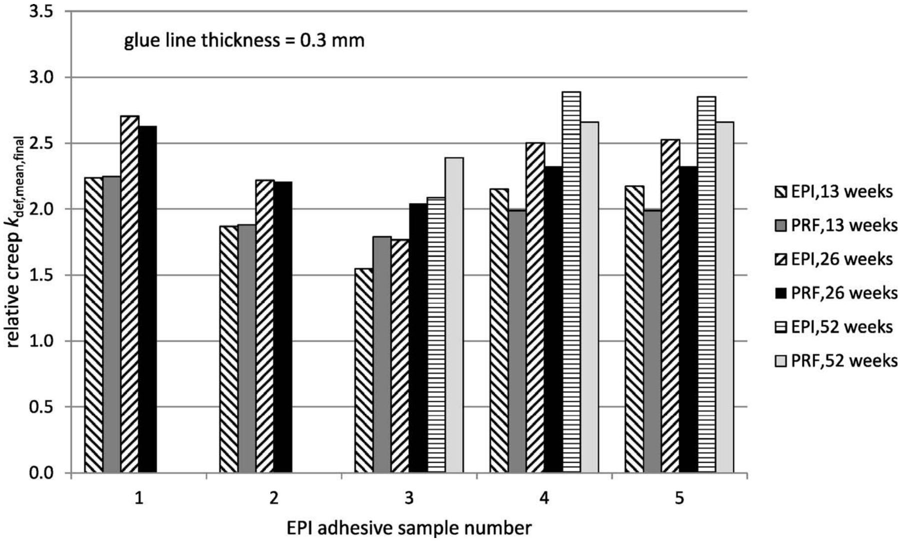

Figure 12.—Mean relative creep values $k_{def,mean,final}$ *of five emulsion polymer isocyanate (EPI) adhesive products and of matched phenolic resorcinol-formaldehyde (PRF) samples for different creep times.*

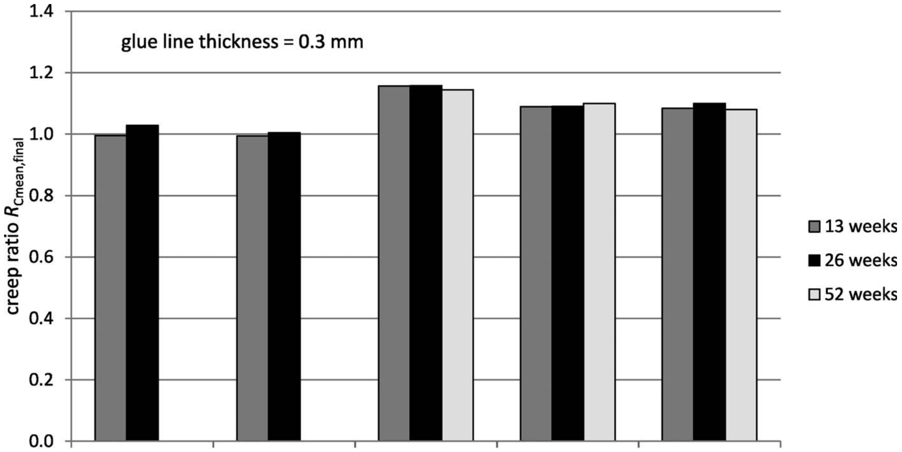

Figure 13.—Mean creep ratios $R_{Cmean,final}$ *of five emulsion polymer isocyanate (EPI) adhesive products for different creep times.*

deviations and COVs. The individual $R_{\mathrm{Cmean,final}}$ values evaluated for 13, 26, and 52 weeks for the different EPI products and creep times show minimum and maximum values of 0.99 and 1.16, respectively, which conform very closely to the results obtained for the PU adhesives. Regarding the effect of the creep time, however, the above-stated numbers give a somewhat distorted picture, as the $R_{\mathrm{Cmean,final}}$ value for 52 weeks does not include the adhesive products E1 and E2, which up to a period of 26 weeks, revealed almost no creep at all, leading to the termination of the respective tests. When comparing the adhesives products E3, E4, and E5, all of which were tested for 13, 26, and 52 weeks, almost no effect of prolonged creep time was obtained, i.e.,

$$R_{\mathrm{Cmean,final}}(13\ \mathrm{wk}) \approx R_{\mathrm{Cmean,final}}(26\ \mathrm{wk}) \approx R_{\mathrm{Cmean,final}}(52\ \mathrm{wk}) \approx 1.11 \pm 0.04$$

with a COV of 3.3 percent. Bearing in mind the rather small database for the EPI adhesives, the presented results suggest a case equally as good as that for the PU adhesives in reducing the creep times of the first compulsory loading period and of the second period in the case of conforming results to 13 weeks. With regard to absolute values, there is some evidence that the creep of the EPIs is somewhat lower compared with the PU adhesives when regarding the entity of different products. For individual products, however, the opposite can apply.

Level of Relative Creep of Investigated PU, EPI, and PRF Specimens

The k_{def} values for the PU, EPI, and PRF bonds obtained in the presented constant load creep tests, in the range of about 2.5 to 3 for a time period of up to 1 year, are throughout considerably higher than those stated in design codes or obtained in adhesive performance–related creep tests with larger specimens. For instance, a k_{def} value of 0.8 is given for solid wood and glulam in the European timber design code, Eurocode 5 (CEN 2014), for determination of the creep contribution $u_{\mathrm{creep}} = u_{\mathrm{inst}} \cdot k_{\mathrm{def}}$ to the final deformation u_{fin} for quasi-permanent combinations of actions in the case of Service Class 2 (SC 2). Permanent loading according to Eurocode 5 is related to a cumulated duration of load of a minimum of 10 years. (Note: SC 2 is herein defined as the time that the average moisture content of most softwoods does not exceed 20%, corresponding to a temperature of 20°C and an RH that exceeds 85%, for a maximum of a few weeks per year.)

The magnitude of the Eurocode 5–specified k_{def} values is also confirmed by long-term tests with the two first-generation PU adhesives (MPA 1991, 1993). Here, the assessment of creep behavior is investigated by four-point bending tests with larger glued laminated cross sections with width and depth of 120 by 150 mm, respectively (Radovic and Rothkopf 2003). The stated tests are performed with a constant shear stress level (1.2 MPa) in the glue line at middepth, complying with EN 15416-3:2010. The still ongoing creep tests give, for the specimens with both cited PU adhesives at a creep period of 1 year, k_{def} values (average of two specimens each) of 0.36 and 0.46 and, after 10 years of creep loading, 0.55 and 0.76. The PRF reference k_{def} values for the same periods are 0.38 and 0.60, respectively. The PRF results correspond well with the results from one of the PU products, whereas the other PU showed a somewhat increased creep level, although still acceptable in engineering applications at similar climate conditions.

The pronounced discrepancy between the rather low k_{def} values of the larger creep specimens compared with the smaller specimens defined in EN 15416-3 (CEN 2010) results from the size- and climate-dependent, considerably reduced mechanosorptive effect of timber creep and from the lower temperatures that rarely exceed 30°C.

Conclusions

The presented results reveal the creep behavior of different products of adhesives, most of which were approved or qualified according to the European adhesive tests and classification requirement standards and belonging to three chemically very different adhesive families—one-component moisture curing polyurethane (PU) adhesives and emulsion polymer isocyanate (EPI) compared with the zero to marginally creeping PRF adhesives. All bending creep tests were performed according to the European adhesive creep test standard EN 15416-3 (CEN 2010) for the presently prescribed minimum period of 26 weeks with an applied, constant glue line shear stress of 1.2 MPa with weekly varying cool/moist (20°C/85% RH) and warm/dry (45°C/40% RH) climate conditions. The results obtained for the glue line thickness of 0.3 mm proved or indicated for the PU and EPI adhesives, respectively, the appropriateness of a reduction of the presently standardized compulsory creep time of 26 weeks by 50 percent without any loss of assessment basis. Hereby, the present creep qualification limits can be maintained almost unchanged.

For the one-component moisture hardening PU adhesive, a very pronounced effect of the glue line thickness on creep has been encountered and must be addressed in ongoing attempts to qualify this adhesive class for an in-use glue line thickness of 0.5 mm. The results indicate further that the present regulations in the classification and requirement standard on emulsion polymer isocyanate adhesives, prescribing equal relative creep or creep ratio limits for different glue line thicknesses, are too liberal. The evaluations support the idea that the present European creep test standard should be revised, especially with regard to smaller adherend cross sections, in order to reduce the superimposed creep contribution of the wood. Further, prolonged climate step lengths and temperature amplitudes up to those given in the design codes (e.g., 60°C in Eurocode 5) should be introduced in order to differentiate in more detail the behavior of the regarded polyaddition adhesives and to provide a quicker evaluation as to whether the adhesives show a strong viscous-flow component within the regarded moisture and temperature ranges.

In conclusion, it should be remarked that despite the proposed possible changes, the present European adhesive creep tests and the respective requirements provide a good means of separating the poorly performing products from adhesives deemed suitable for structural applications.

Literature Cited

Aicher, S. 2003. Structural adhesive joints including glued-in bolts. *In:* Timber Engineering. S. Thelandersson and H. J. Larsen (Eds.). John Wiley & Sons, Chichester, UK. pp. 333–363.

ASTM International. 2013. Standard test method for resistance to creep under static loading for structural wood laminating adhesives used under exterior exposure conditions. ASTM D3535-07a. ASTM International, West Conshohocken, Pennsylvania.

DIBt. 2001. Allgemeine bauaufsichtliche Zulassung (national technical approval). ISO SET-EPI-Klebstoffsystem WD3-A322 mit CX-47 und ISO SET-PEP-Klebstoffsystem UX-100 mit WD3-A322. Approval holder: Ashland Speciality Chemical, Columbus, Ohio. Z-9.1-422. DIBt, Berlin.

DIBt. 2002. Allgemeine bauaufsichtliche Zulassung (national technical approval). Klebstoffe ''Purbond HB'' in Verbindung mit dem Auftragssystem KEBA für Keilzinkenverbindungen von Nadelholz. Approval holder: Purbond AG, Sempach-Station, Switzerland. Z-9.1-543. DIBt, Berlin.

European Committee for Standardization (CEN). 2005. Timber structures—Glued laminated timber—Requirements. EN 14080:2005. CEN-CENELEC, Brussels.

European Committee for Standardization (CEN). 2007. Adhesives for load bearing structures other than phenolic and aminoplastic—Test methods—Part 3: Creep deformation test at cyclic climate conditions with specimens loaded in bending shear. EN 15416-3:2007. CEN-CENELEC, Brussels.

European Committee for Standardization (CEN). 2008a. Adhesives for load bearing timber structures other than phenolic and aminoplastic—Test methods—Part 2: Static load test of multiple bondline specimens in compression shear. EN 15416-2:2008. CEN-CENELEC, Brussels.

European Committee for Standardization (CEN). 2008b. Adhesives—One component polyurethane for load bearing timber structures—Classification and performance requirements. EN 15425. CEN-CENELEC, Brussels.

European Committee for Standardization (CEN). 2010. Adhesives for load bearing structures other than phenolic and aminoplastic—Test methods—Part 3: Creep deformation test at cyclic climate conditions with specimens loaded in bending shear. EN 15416-3:2007 + A1:2010. CEN-CENELEC, Brussels.

European Committee for Standardization (CEN). 2013a. Timber structures—Glued laminated timber—Requirements. EN 14080. CEN-CENELEC, Brussels.

European Committee for Standardization (CEN). 2013b. Adhesives—Emulsion polymerized isocyanate (EPI) for loadbearing timber structures—Classification and performance requirements. EN 16254. CEN-CENELEC, Brussels.

European Committee for Standardization (CEN). 2014. Design of timber structures—Part 1-1: General—Common rules and rules for buildings. EN 1995-1-1:2004 + A2:2014. CEN-CENELEC, Brussels.

Geiss, P. L. 2011. Creep load conditions. *In:* Handbook of Adhesion Technology. L. F. M. da Silva, A. Öchsner, and R. D. Adams (Eds.). Springer, Berlin. pp. 875–902.

George, B., C. Simon, M. Properzi, A. Pizzi, and G. Elbez. 2003. Comparative creep characteristics of structural glulam wood adhesives. *Eur. J. Wood Wood Prod*. 61(1):79–80.

Materials Testing Institute (MPA), University of Stuttgart. 1991. Acknowledgement of the suitability of the one-component polyurethane adhesive technicoll 2006 for the gluing of load bearing timber products according to DIN 1052. Issued on December 5, 1991. (In German.)

Materials Testing Institute (MPA), University of Stuttgart. 1993. Acknowledgement of the suitability of the one component polyurethane adhesive Collano HB 110 for the gluing of load bearing timber products according to DIN 1052. Issued on May 13, 1993. (In German.)

Na, B., A. Pizzi, L. Delmotte, and X. Lu. 2005. One-component polyurethane adhesives for green wood gluing: Structure and temperature-dependent creep. *J. Appl. Polym. Sci*. 96(4):1231–1243.

Radovic, B. and H. Goth. 1994. Einkomponenten-Polyurethan-Klebstoffe für die Herstellung von tragenden Holzbauteilen [One-component polyurethane adhesives for the production of structural wood members]. *Bauen mit Holz* 96(1):22–32.

Radovic, B. and C. Rothkopf. 2003. Eignung von 1K-PUR-Klebstoffen für den Holzbau unter Berücksichtigung von 10-jähriger Erfahrung [Suitability of 1K-PUR adhesives for wood construction, including 10 years of experience]. *Bauen mit Holz* 103(6):36–40.

Ranta-Maunus, A. 1990. Impact of mechano-sorptive creep to the long-term strength of timber. *J. Wood Wood Prod*. 48(2):67–71.

Richter, K. and R. Steiger. 2005. Thermal stability of wood-wood and wood-FRP bonding with polyurethane and epoxy adhesives. *Adv. Eng. Mater*. 7(5):419–426.

Serrano, E. 2000. Adhesive joints in timber engineering—Modelling and testing of fracture properties. Doctoral dissertation. Lund University, Lund, Sweden.

Toratti, T. 1992. Creep of timber beams in a variable environment. Doctoral dissertation. Helsinki University of Technology, Helsinki.